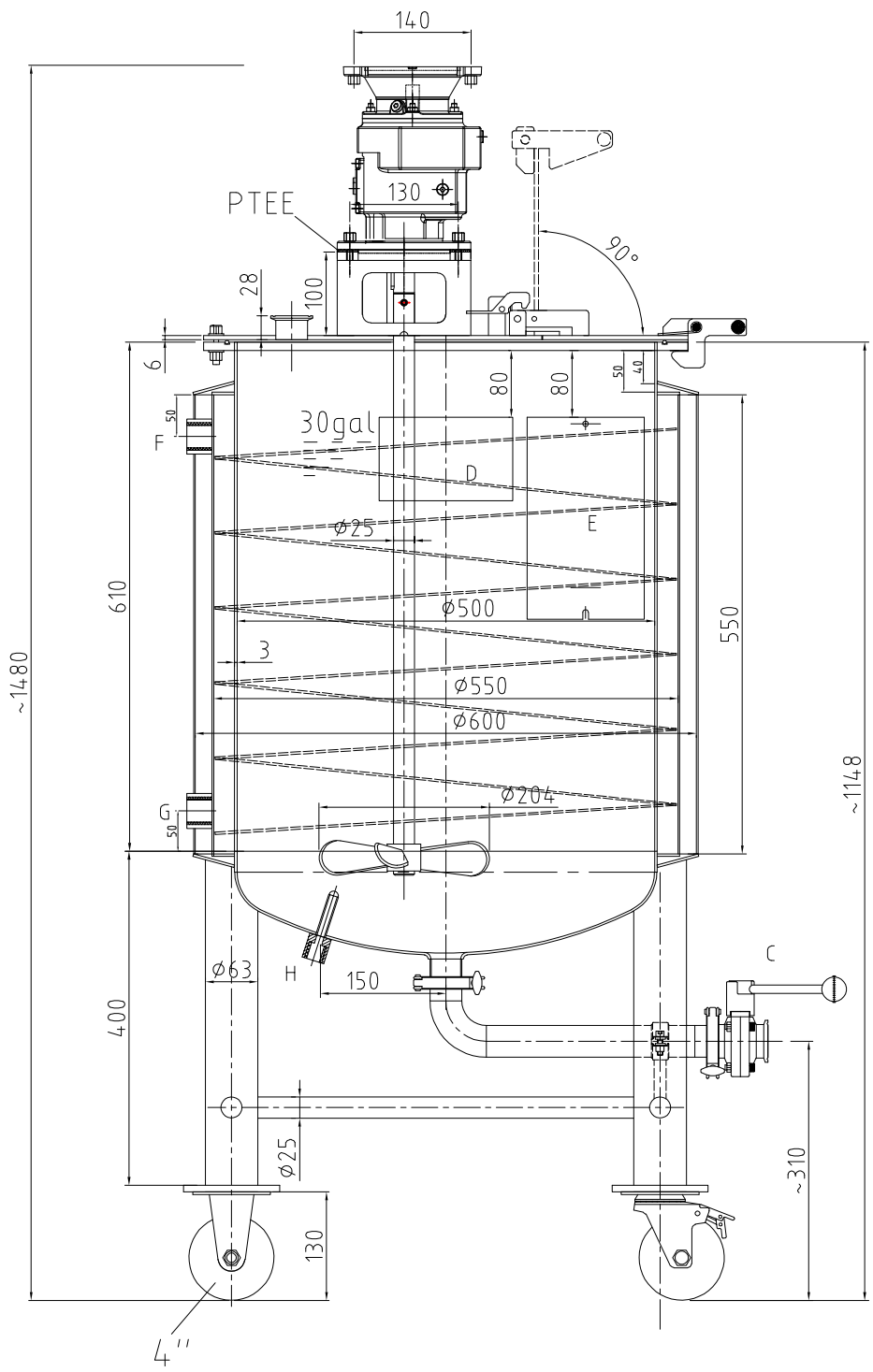

Design data

Vessel category		Normal pressure	
Description of parameter		Vessel	Jacket
Working pressure	bar	ATPM	2
Design pressure	bar	ATPM	2
Level tesing pressure	bar	ATPM	3
Medium			HOT Water
Material		SUS 304	SS 304
Working temperature	°C	-10 to +100°C	
Design temperature	°C	-10 to +100°C	
Gross volume	GAL	36	
Net volume	GAL	30	
Heat exchanger area	m²	0.86	
Insulation material		PU	
Insulation thickness	mm	25	
Dry Weight	KGS		

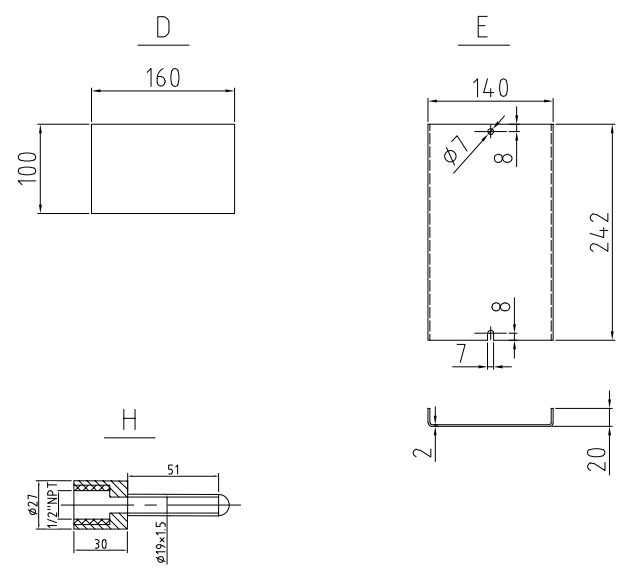

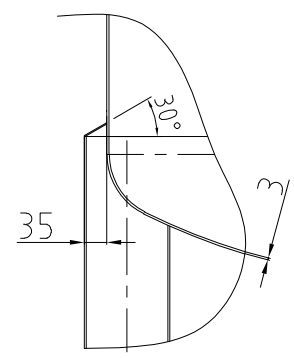

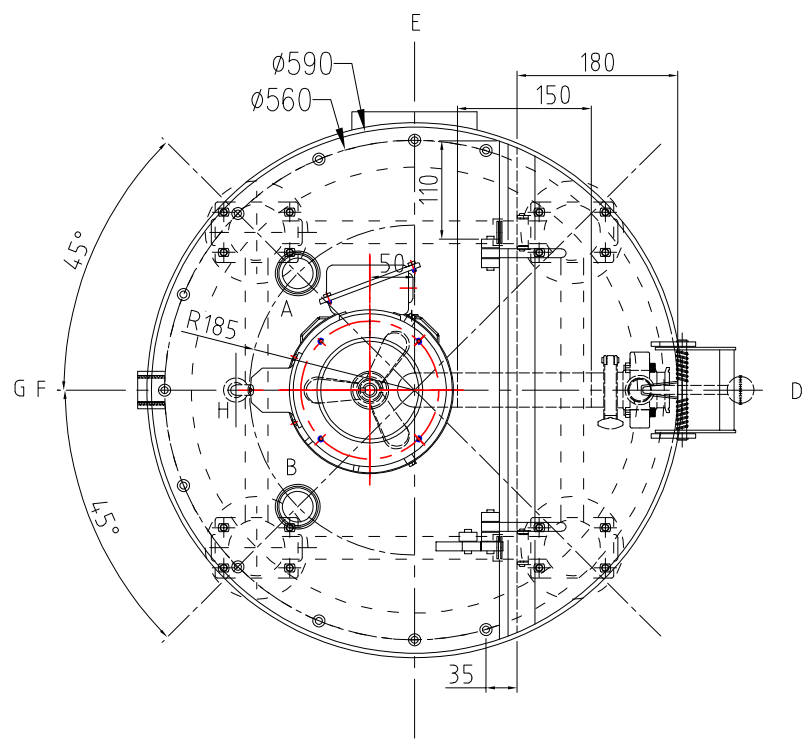

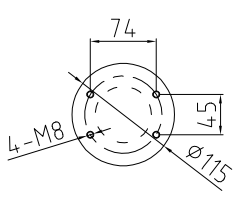

CONNECTIONS

MARK	DN	DESCRIPTION	CONNECT SIZE	REMARKS
A	1.5"TC	Inlet	ø38.1×1.5	ISO
B	1.5"TC	Inlet	ø38.1×1.5	ISO
C	1.5"TC	Outlet	ø38.1×1.5	ISO
D	4"×6.3"	Nameplate	100×160	
E	2.5"×9.6"	VFD Support	140×242	
F	1"npt(F)	Hot water outlet	1"npt(F)	NPT
G	1"npt(F)	Hot water inlet	1"npt(F)	NPT
H	1/2"npt(F)	Thermowell	1/2"npt(F)	NPT

02/23/2021

30GAL MIXING TANK
(Jacketed)